Measurements Using Arduino

What is Arduino?

Arduino designs, manufactures, and supports electronic devices and software, allowing people around the world to easily access advanced technologies that interact with the physical world.

Mission:

Arduino's mission is to enable anyone to enhance their lives through accessible electronics and digital technologies. There was once a barrier between the electronics, design, and programming world and the rest of the world. Arduino has broken down that barrier.

Course Outcomes:

1. Demonstrate Knowledge of Arduino Components.

2. Assess the effectiveness of Arduino-based systems.

3. Create functional Arduino projects exhibiting proficient programming skills and component interfacing.

History

Arduino was born at the Ivrea Interaction Design Institute, Italy, as an easy tool for fast prototyping, aimed at students without a background in electronics and programming.

Common examples of such devices intended for beginner hobbyists include simple robots, thermostats, and motion detectors.

The name *Arduino* comes from a café in Ivrea, Italy, where some of the project's founders used to meet.

Features of Arduino:

- **Open-source hardware and software**: Anyone can use and modify Arduino.
- **Microcontroller-based**: Uses microcontrollers like **ATmega328** (used on Arduino Uno).
- **Digital and Analog Input/Output (I/O) Pins**: Can read data from sensors and control devices like LEDs, motors.
- **USB connectivity**: For programming and communication with computers.
- **Breadboard friendly and affordable**.

Types of Arduino Boards

- Arduino Uno (we will use this)
- Arduino Nano
- Arduino Mega
- Arduino Leonardo
- Arduino MKR and
- others (for IoT and wireless applications)

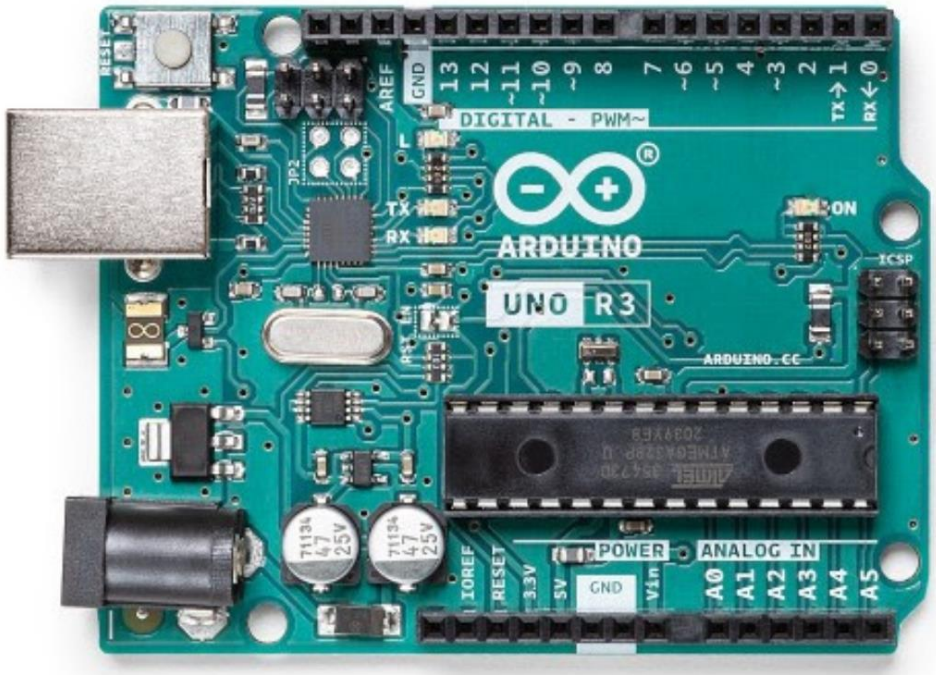

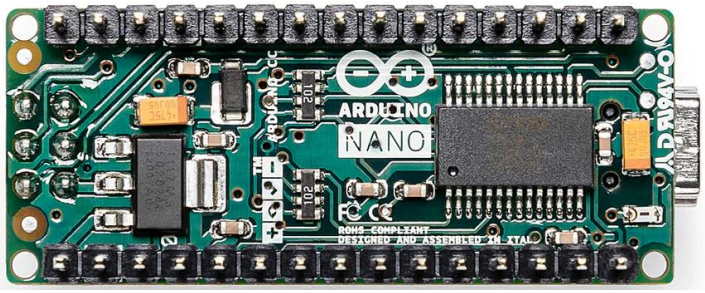

Arduino Uno R3 Components

Component	Description & Function
1. Microcontroller (ATmega328P)	The **main processor** or **brain** of the board. Executes the code you upload.
2. Digital I/O Pins (0–13)	Can be used as **inputs** (to read data) or **outputs** (to control devices like LEDs, motors). Pins **3, 5, 6, 9, 10, 11** support **PWM (Pulse Width Modulation)**.
3. Analog Input Pins (A0–A5)	Read **analog signals** from sensors (e.g., temperature, light). These inputs are **10-bit resolution** (values from 0 to 1023).
4. Power Pins (3.3V, 5V, GND, Vin)	Provide regulated voltages for external components and sensors.
5. Reset Button	Resets the microcontroller and restarts the program from the beginning. Useful during testing and troubleshooting.
6. USB Port (Type B)	Connects to your **computer** to **upload code** and provide **power**. Communicates via the **ATmega16U2** USB-serial converter.
7. External Power Jack (Barrel Jack)	Alternative way to power the board (7–12V recommended).

8. Crystal Oscillator (16 MHz)	Provides the **clock signal** to the microcontroller for accurate timing and execution of instructions.
9. Voltage Regulator	Ensures the board receives **safe voltage levels** (protects against over-voltage).
10. TX and RX LEDs	Indicate **data transmission (TX)** and **reception (RX)** between the Arduino and the computer. Blink during code upload or serial communication.
11. Built-in LED (Pin 13)	An onboard LED useful for simple programming tests like the **Blink** example.
12. ICSP Headers (for ATmega328P and ATmega16U2)	**In-Circuit Serial Programming** pins used for **burning bootloader** or low-level firmware updates.
13. ATmega16U2 Microcontroller	Handles **USB-to-serial communication** with your PC. Not involved in running your Arduino sketch.

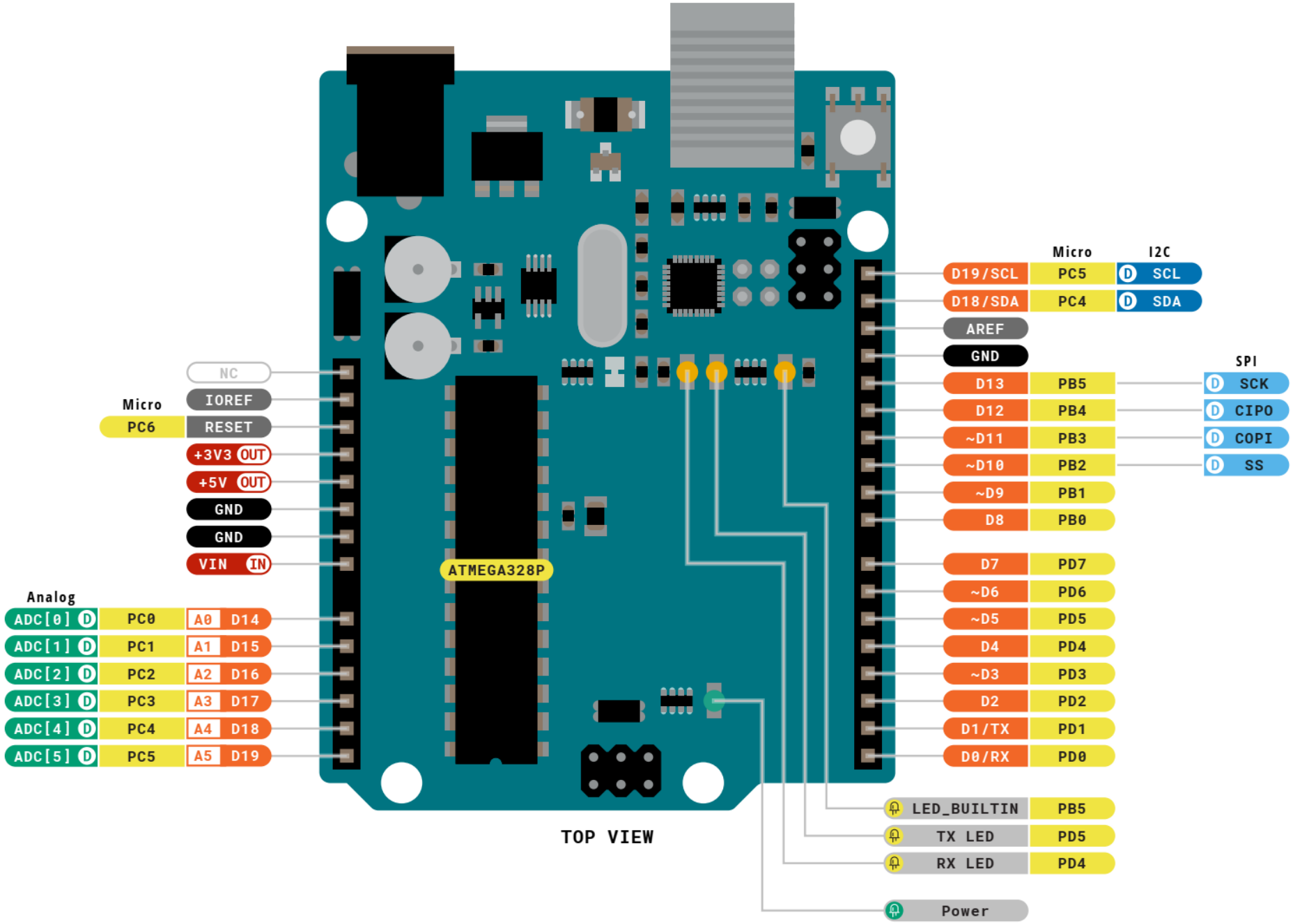
Micro
I2C
D19/SCL
PC5
D SCL
D18/SDA
PC4
D SDA
AREF
GND
SPI
D13
PB5
D SCK
D12
PB4
D CIPO
~D11
PB3
D COPI
~D10
PB2
D SS
~D9
PB1
D8
PB0
D7
PD7
~D6
PD6
~D5
PD5
D4
PD4
~D3
PD3
D2
PD2
D1/TX
PD1
D0/RX
PD0
LED_BUILTIN
PB5
TX LED
PD5
RX LED
PD4
Power
NC
IOREF
Micro
PC6
RESET
+3V3 OUT
+5V OUT
GND
GND
VIN IN
ATMEGA328P
Analog
ADC[0] D
PC0
A0
D14
ADC[1] D
PC1
A1
D15
ADC[2] D
PC2
A2
D16
ADC[3] D
PC3
A3
D17
ADC[4] D
PC4
A4
D18
ADC[5] D
PC5
A5
D19
TOP VIEW

References:

- https://en.wikipedia.org/wiki/Arduino
- https://www.arduino.cc/
- https://docs.arduino.cc
- https://playground.arduino.cc/Interfacing/CPPNotebook/
- https://learn.sparkfun.com/tutorials/tags/arduino
- https://www.allaboutcircuits.com/projects/tag/arduino/